DWG NO.	SH	REV
2436-12		

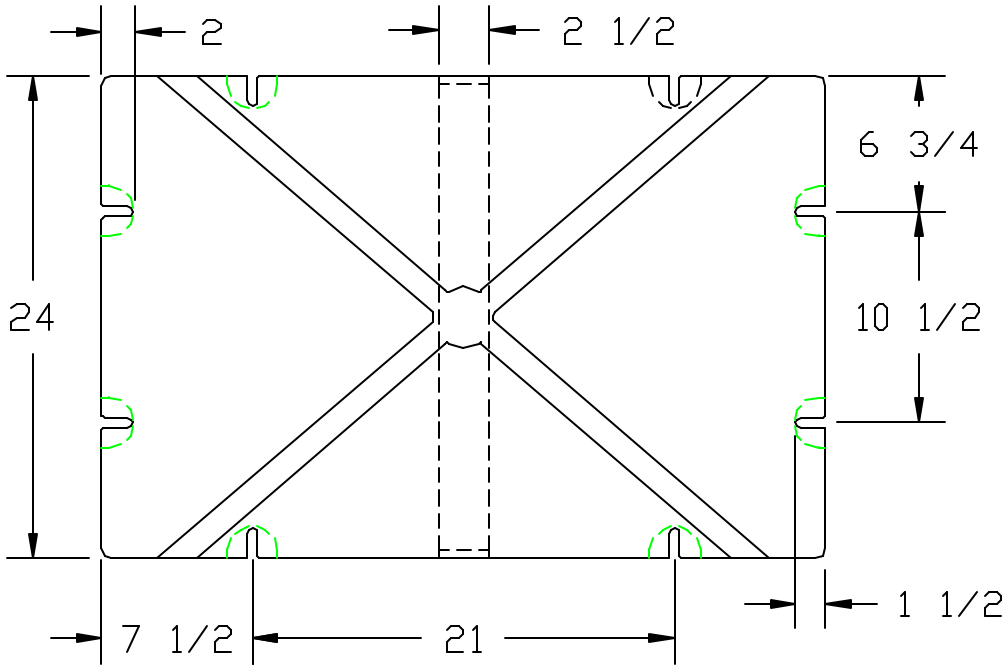

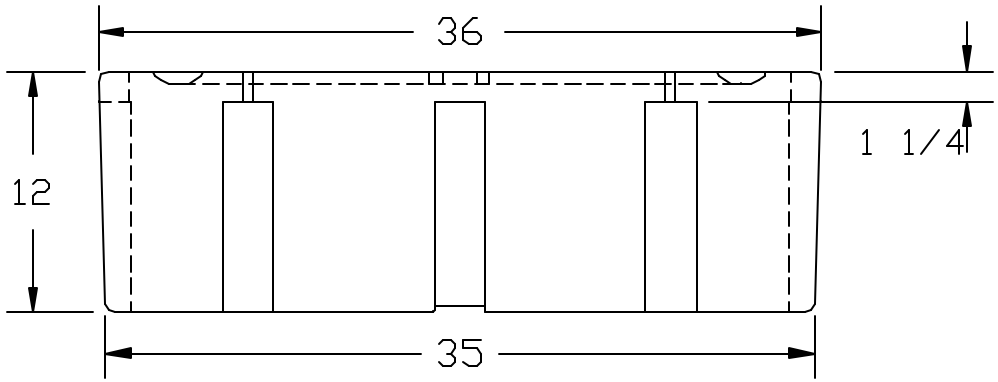

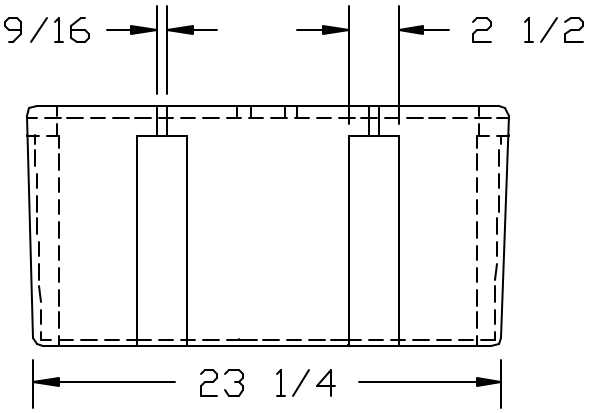

REV	DESCRIPTION	DATE	APVD
1	CHANGE WEIGHTS	11-16-94	

DRAWN: DEAN — DATE: 10-15-93

APPROVED — DATE

MATERIAL: POLYETHYLENE .150 NOM.WALL

SCALE: NONE

UOS DIMENSIONS ARE IN INCHES
GENERAL TOLERANCES
± 1% @ 68° F

THIRD ANGLE PROJECTION

PART WEIGHT
AF 20 LBS.
FF 29 LBS.

ACE ROTO-MOLD

PART NO. 2436-12

SIZE A — DWG NO. 2436-12 — REV