DWG NO. 2448-24	SH	REV

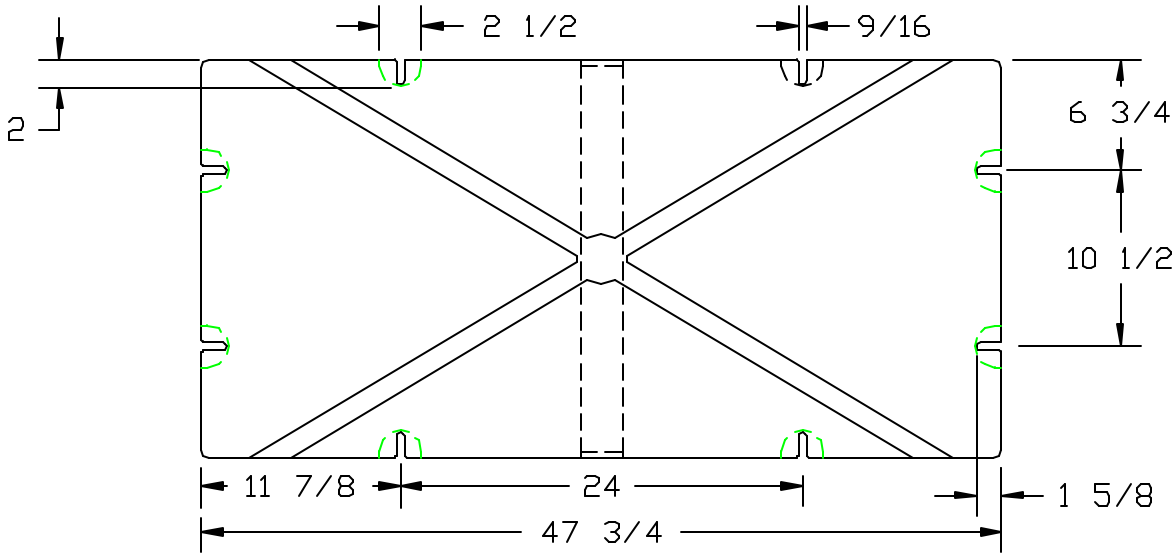

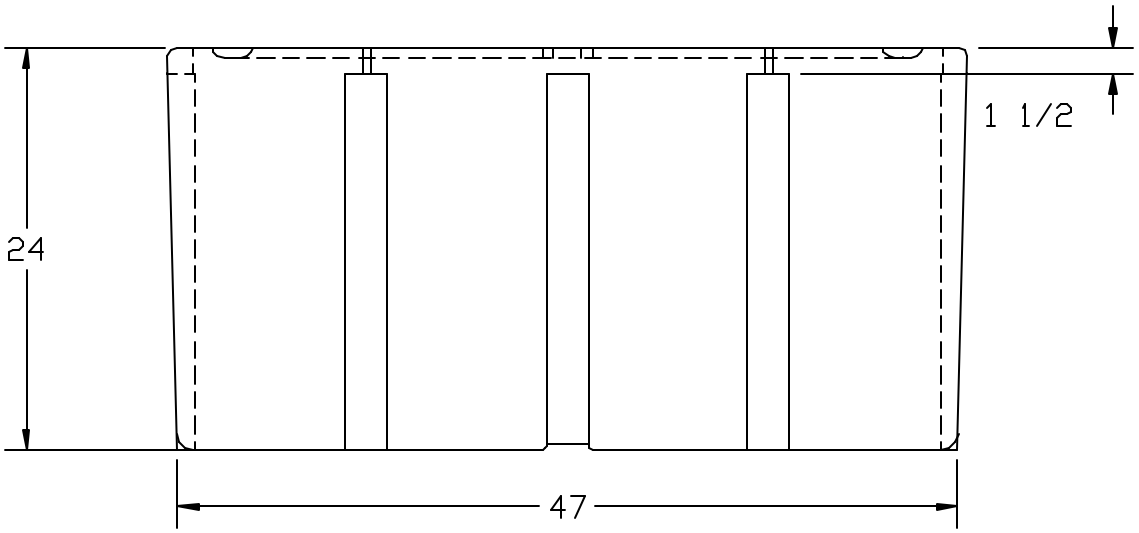

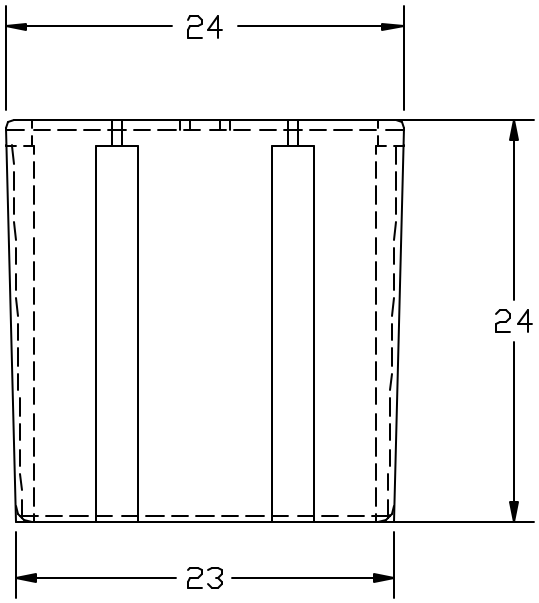

1	CHANGE WEIGHTS	11-16-94	
REV	DESCRIPTION	DATE	APVD

DRAWN BOB	DATE 11/23/99
APPROVED	DATE

MATERIAL
POLYETHYLENE
.170 NOM. WALL

SCALE NONE

UOS DIMENSIONS ARE IN INCHES
GENERAL TOLERANCES
± 1% @ 68° F

THIRD ANGLE PROJECTION

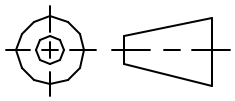

PART WEIGHT
AF 35 LBS.
FF 50 LBS.

ACE ROTO-MOLD

PART NO. 2448-24

SIZE A | DWG NO. 2448-24 | REV