PROPRIETARY DATA
INFORMATION FURNISHED HEREIN IS THE PROPERTY OF DEN HARTOG INDUSTRIES INC. AND SHALL NOT BE USED, DISCLOSED TO OTHERS, OR COPIED WITHOUT EXPRESSED WRITTEN CONSENT OF DEN HARTOG IND. ALL RIGHTS RESERVED.

2496-12

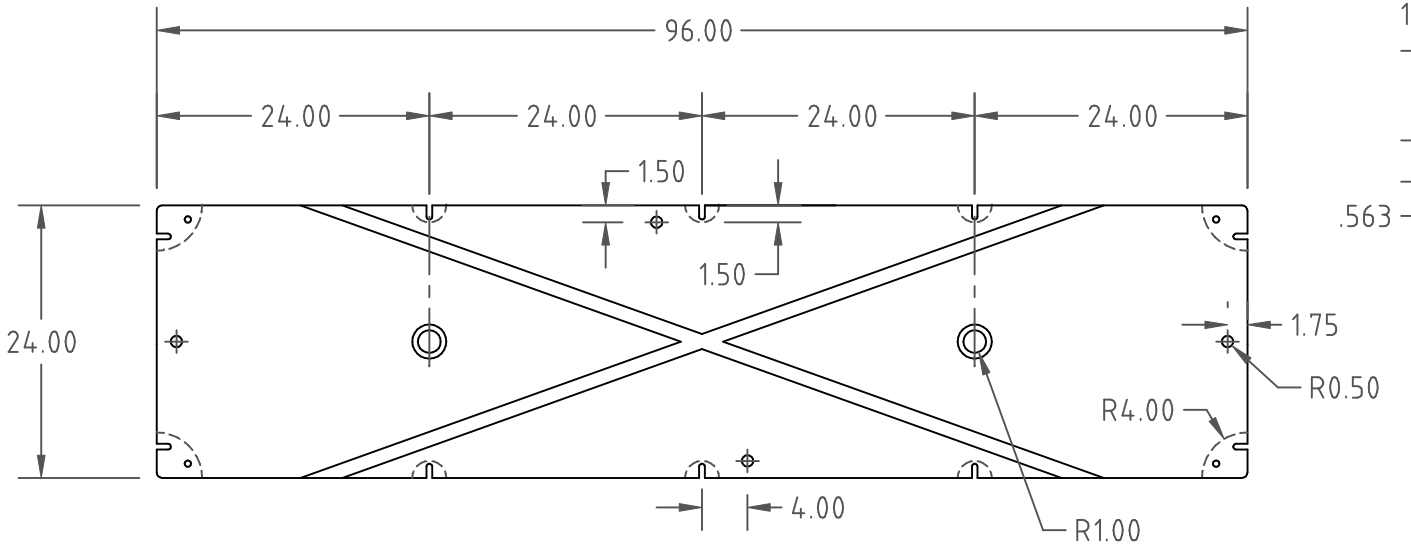

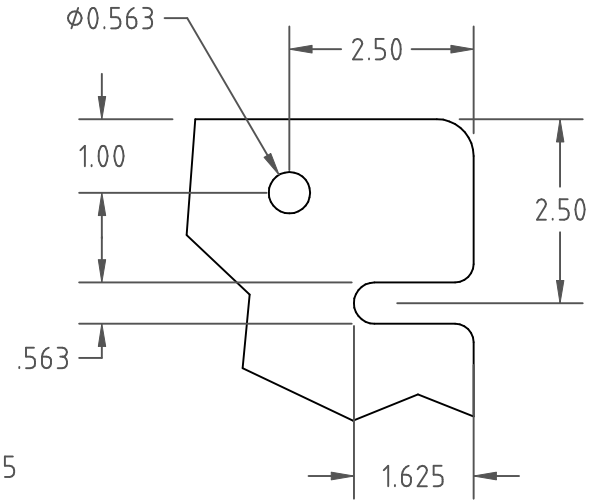

CORNER DETAIL

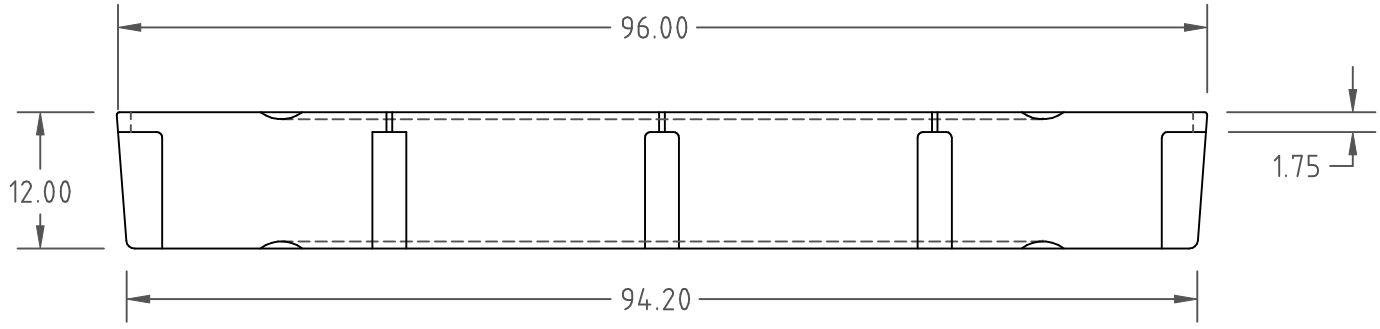

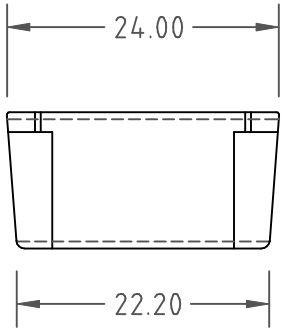

BUOYANCY = 839 LB.

REV	DESCRIPTION	DATE APPRD.

DRAWN /DATE
DHJ 9/19/07

APPRD. /DATE
REH 12/5/07

MATERIAL
FLOAT DRUM BLACK

Ace Roto-Mold
A DIVISION OF DEN HARTOG INDUSTRIES, INC.
4010 HOSPERS DRIVE SOUTH, BOX 425, HOSPERS, IOWA 51238

CLIENT / DESCRIPTION
24 x 96 x 12 FLOAT DRUM

ALL DIMENSIONS ARE IN DECIMAL INCHES
TOLERANCES UNLESS OTHERWISE SPECIFIED
± 1 % @ 68°F

THIRD ANGLE PROJECTION
ANSI 14.5M

NOTES:
AF = 48 LBS.
FF = 64 LBS.

SCALE
NONE

PART NO.
2496-12