DWG NO. 3672-24	SH	REV

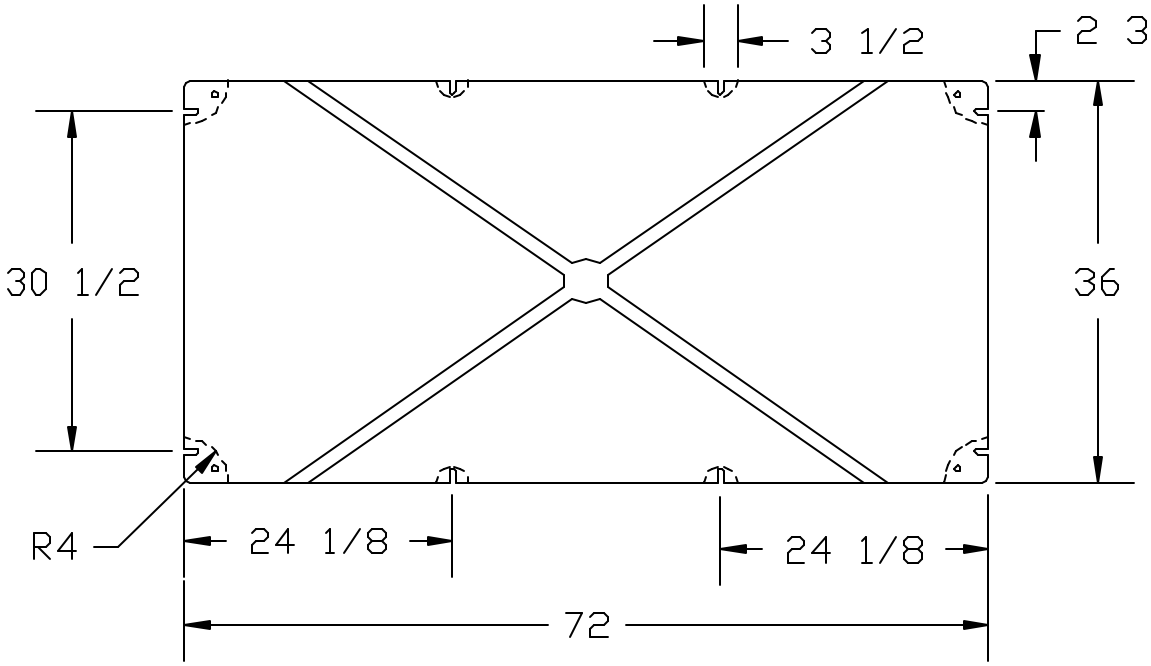

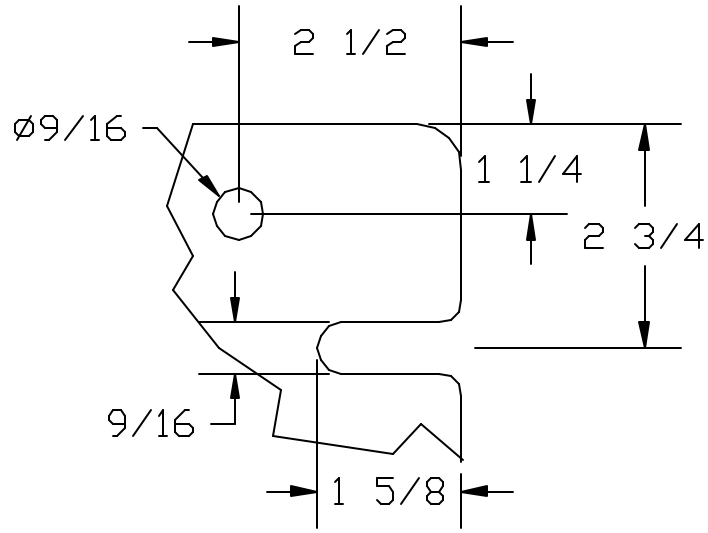

CORNER DETAIL

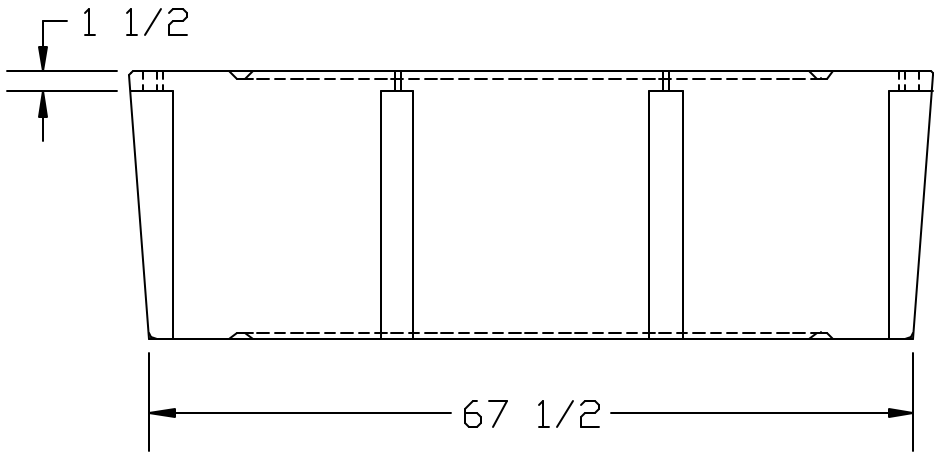

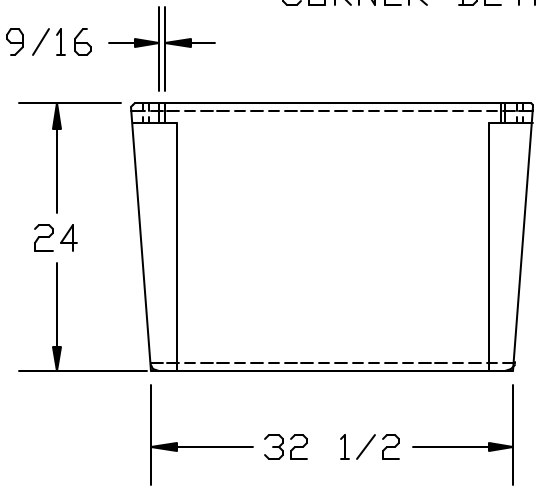

REV	DESCRIPTION	DATE	APVD

DRAWN REH	DATE 9-9-98	MATERIAL POLYETHYLENE .150 NOM. WALL	ACE ROTO-MOLD
APPROVED	DATE		PART NO. 3672-24
SCALE NONE	THIRD ANGLE PROJECTION	PART WEIGHT AF 61 LBS. FF 105 LBS.	SIZE A / DWG NO. 3672-24 / REV

UOS DIMENSIONS ARE IN INCHES
GENERAL TOLERANCES
± 1% @ 68° F