© DEN HARTOG INDUSTRIES, INC.

Copyright. All information furnished within this document, electronic file or design correspondence is the property of Den Hartog Industries, Inc. and shall not be used, disclosed to others or copied without the expressed written consent of Den Hartog Industries, Inc.

DWG NO.	SH	REV
AT3030-90		

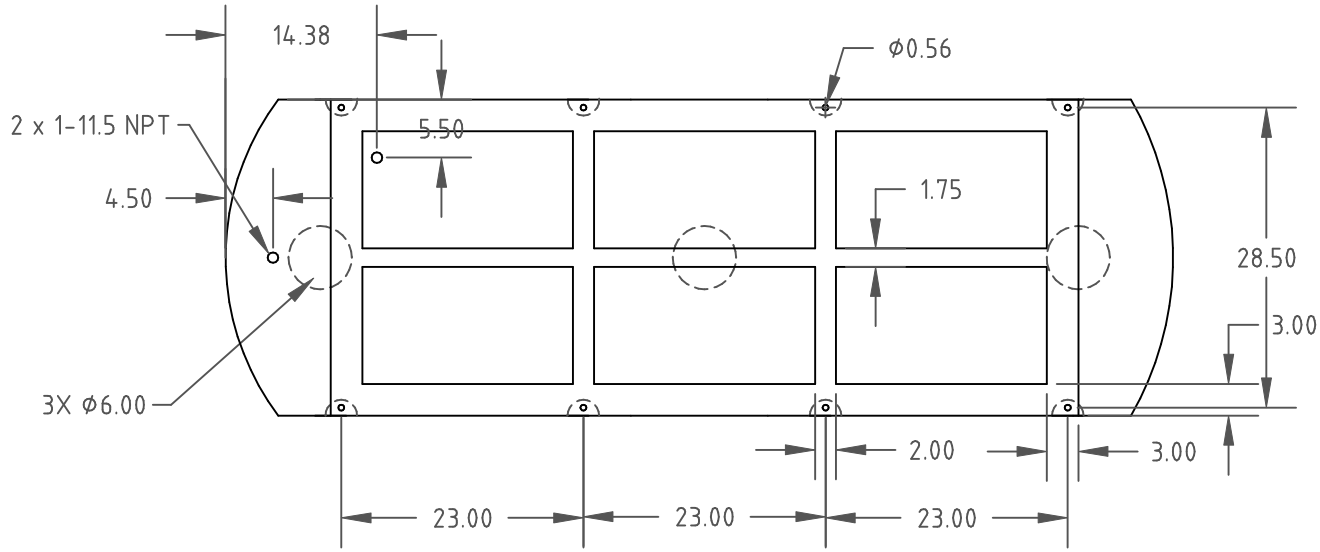

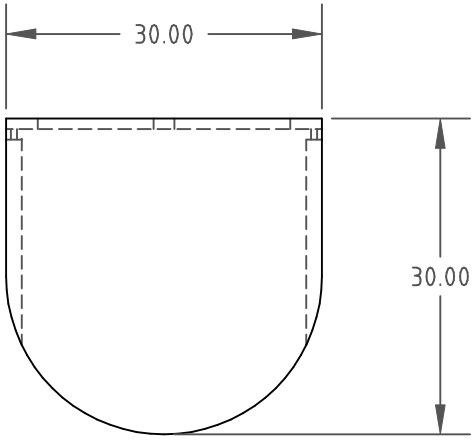

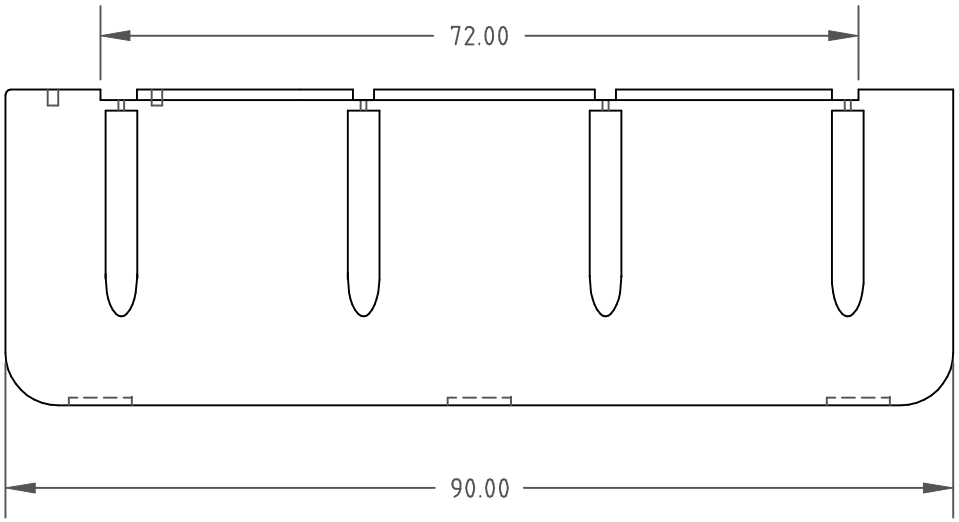

REV	DESCRIPTION	DATE	APVD

DRAWN DHJ	DATE 7-18-06
APPROVED	DATE

MATERIAL
BLACK POLYETHYLENE

SCALE NONE

UOS DIMENSIONS ARE IN INCHES
GENERAL TOLERANCES
± 1% @ 68° F

THIRD ANGLE PROJECTION

PART WEIGHT 130 LBS.

BUOYANCY
2000 LBS.

ACE ROTO-MOLD

PART NO. AT3030-90

SIZE A

DWG NO. AT3030-90

REV